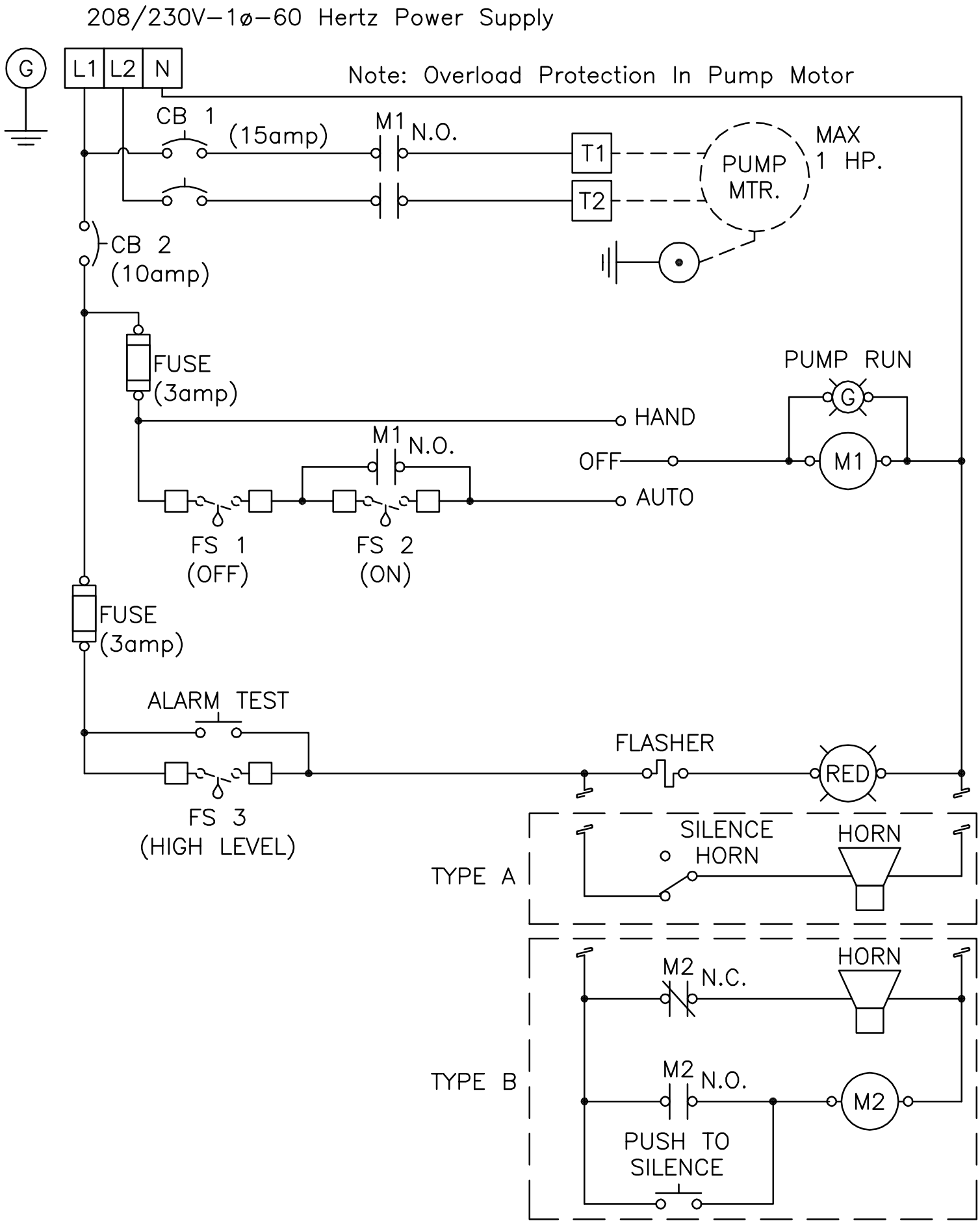

TYPICAL SEPTIC PUMP CONTROL DIAGRAM FEB 2011